plastic and
pool products

oku®
Obermaier GmbH

OKU Holzpool EMOTION-FUN Filterhaus
1,20 x 0,89 m Höhe 1,13 m

Art. Nr.: 800720

19 mm

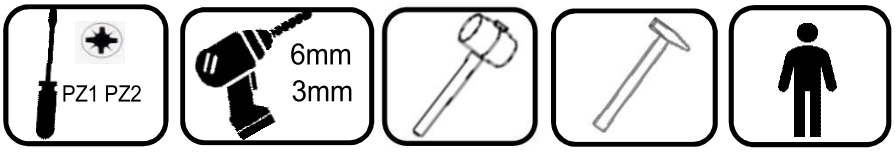
PZ1 PZ2
6mm
3mm

I

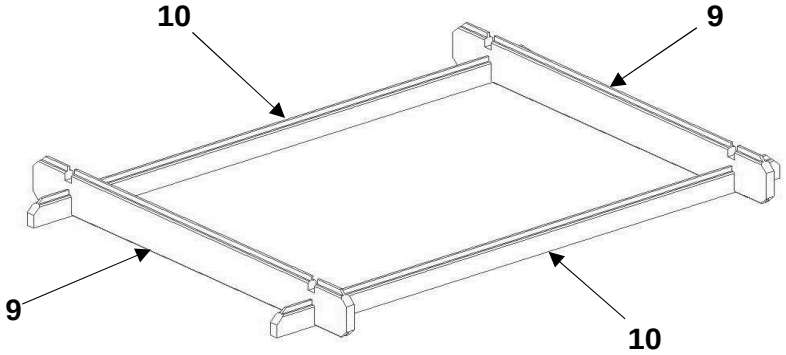

II

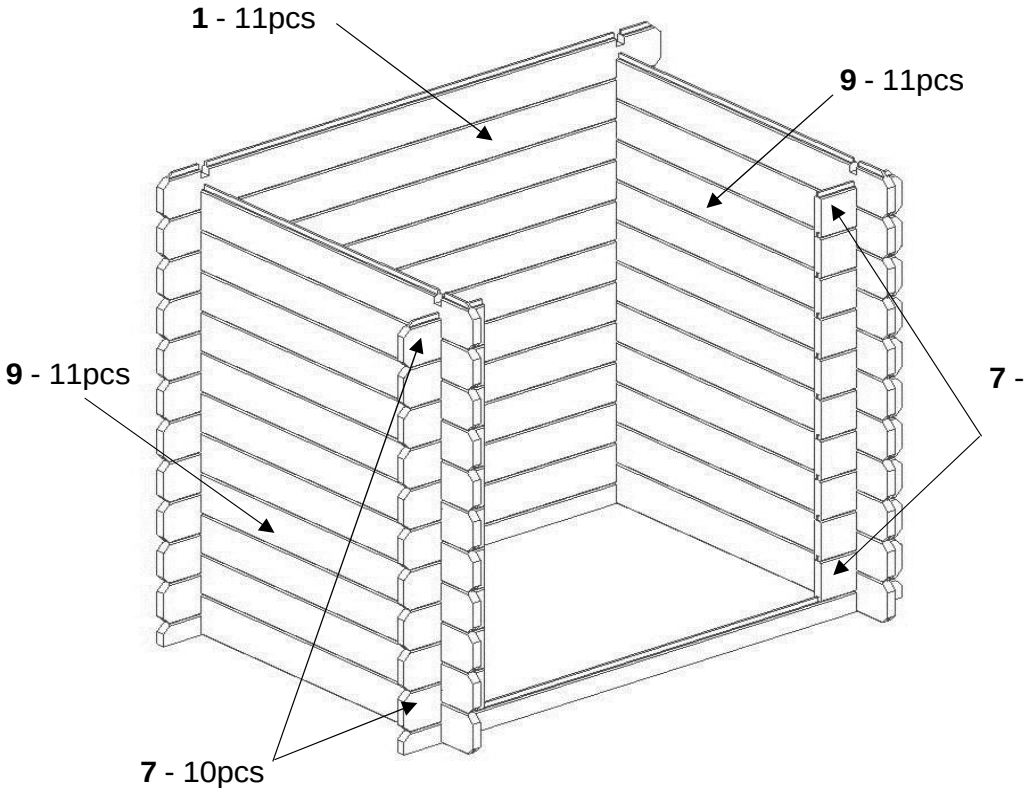

III

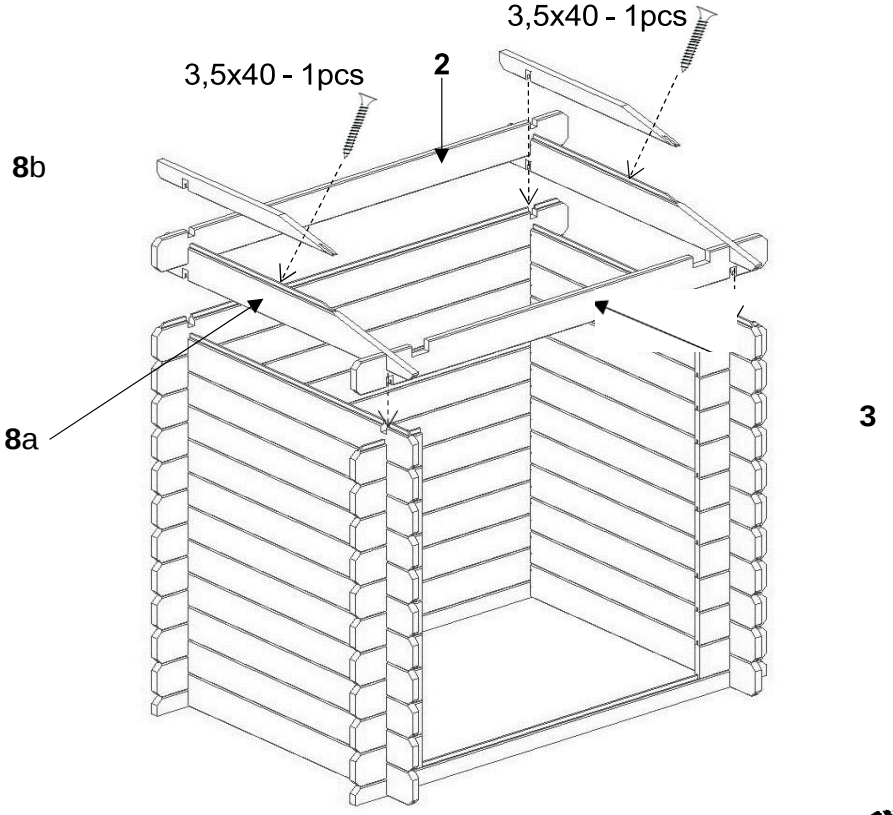

IV

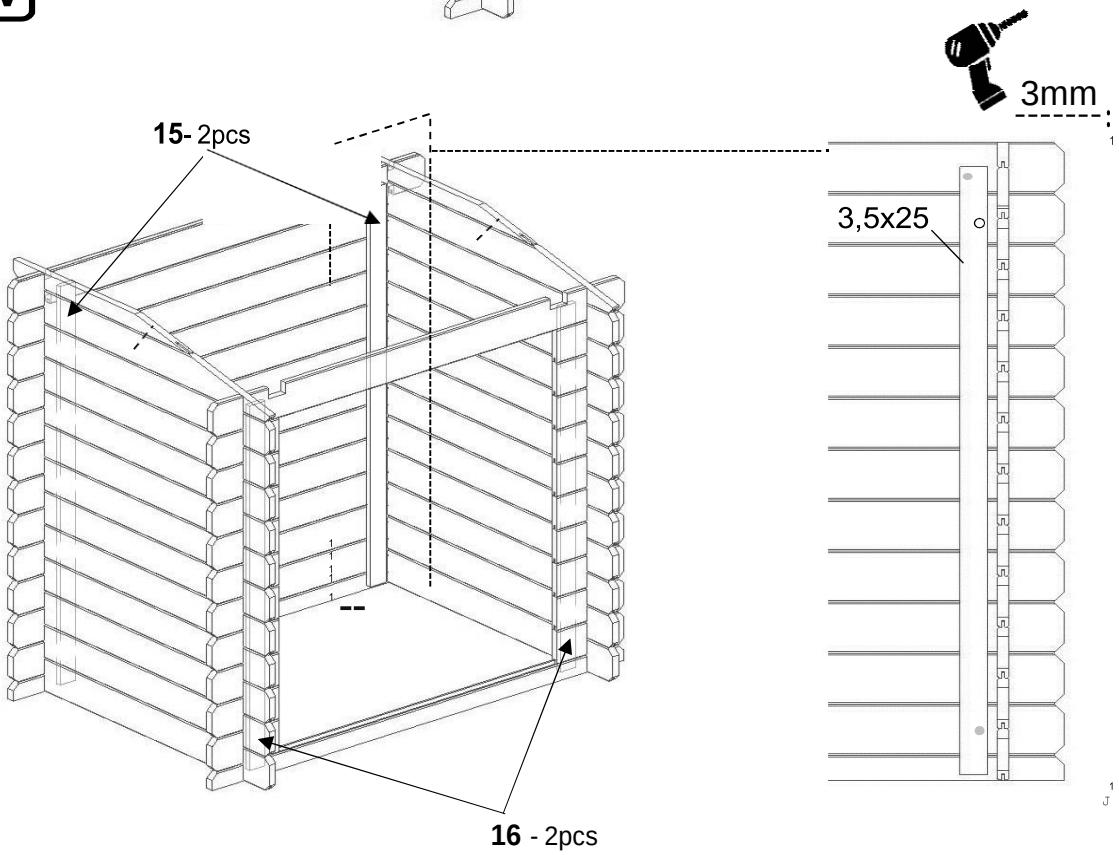

V

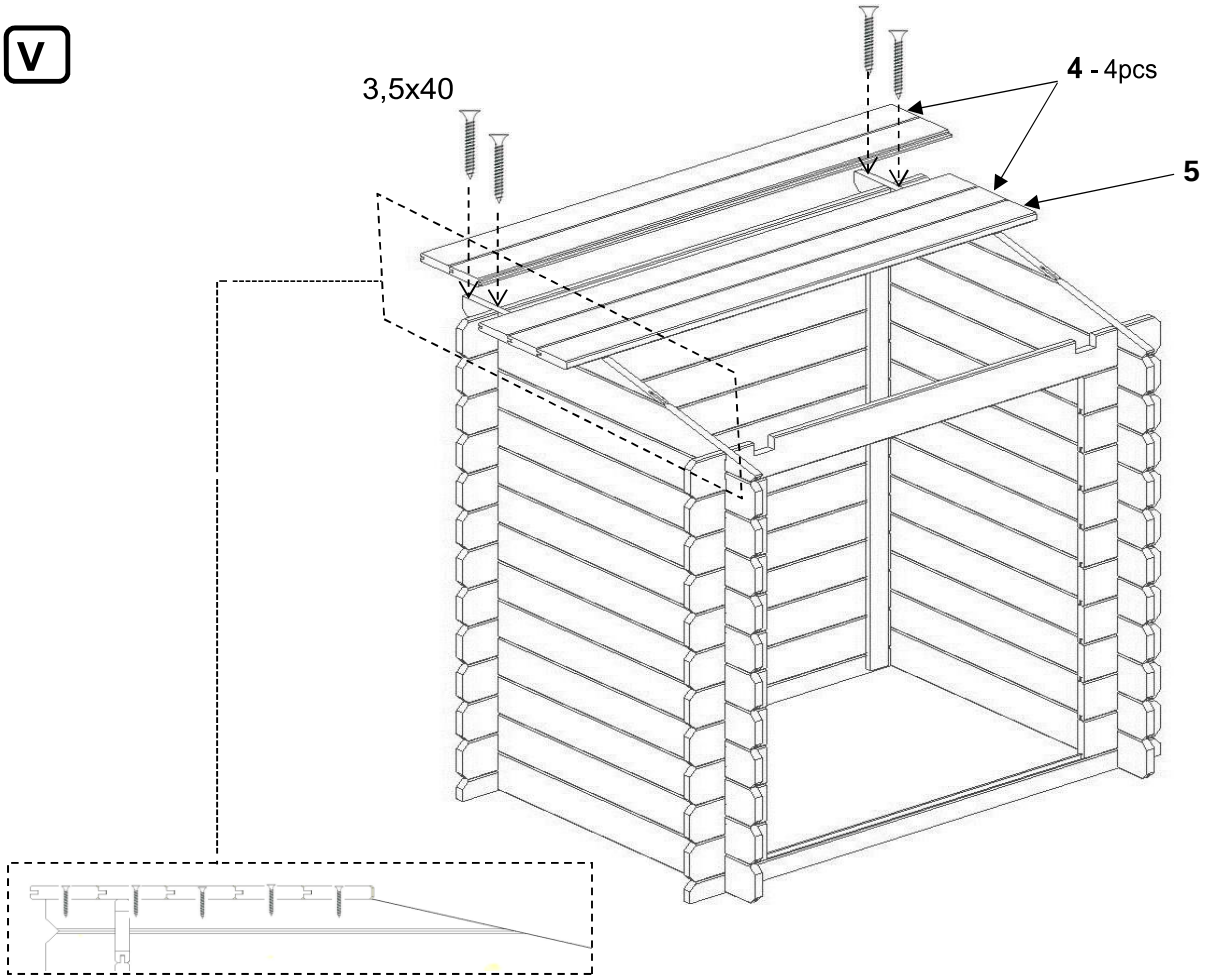
3,5x40
4 - 4pcs
5

VI

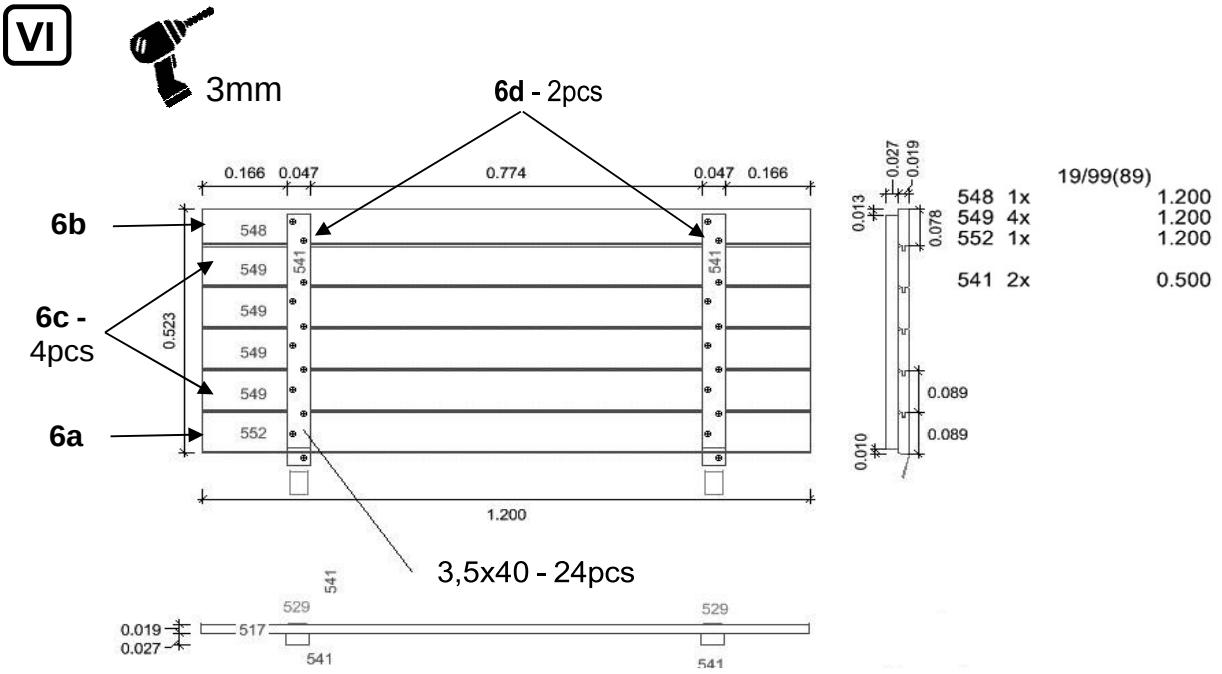
3mm
6d - 2pcs
6b
6c - 4pcs
6a
0.166
0.047
0.774
0.047
0.166
548
549
549
549
549
552
541
541
0.523
1.200
3,5x40 - 24pcs
529
529
517
541
541
0.019
0.027
0.027
0.019
0.013
0.078
0.089
0.089
0.010
19/99(89)
548 1x 1.200
549 4x 1.200
552 1x 1.200
541 2x 0.500

VII

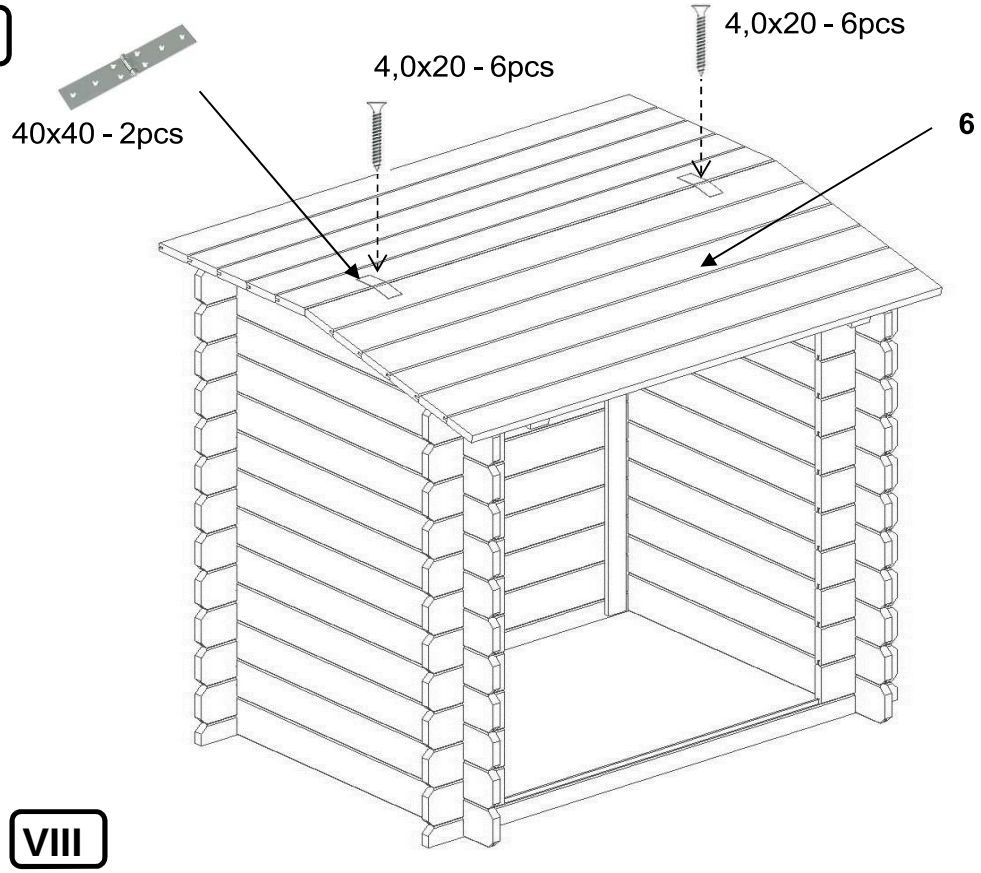

VIII

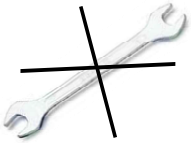

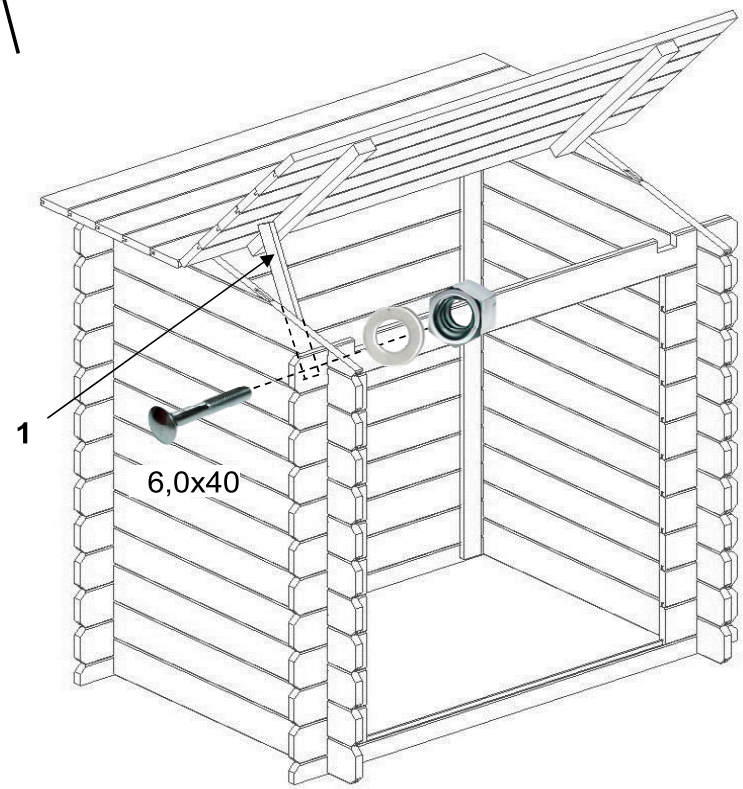

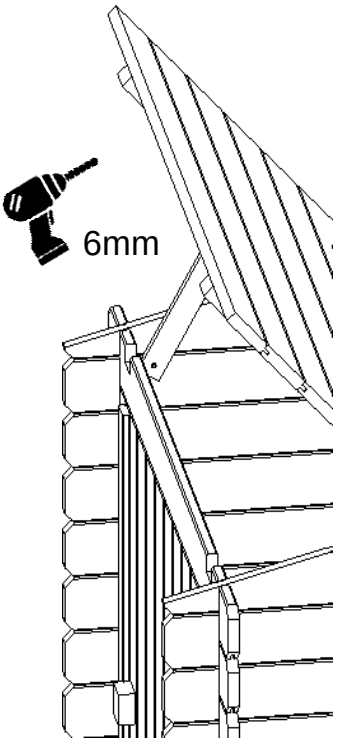

IX

3mm

3,5x40 - 52pcs

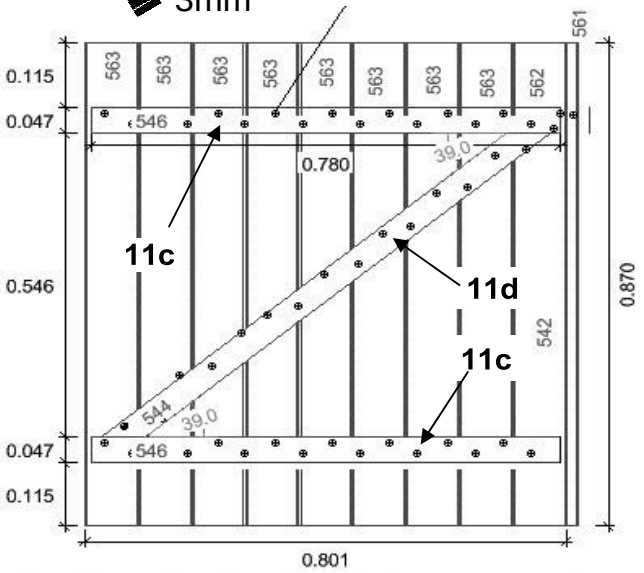

529	2x	35x100
562	1x	0.870
563	8x	0.870
542	1x	0.050
544	1x	0.926
546	2x	0.780
561	1x	0.870

30x70 -

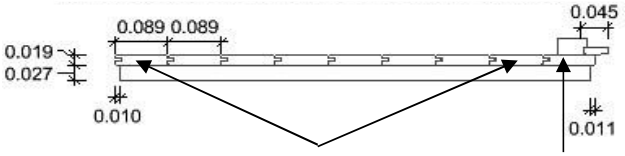

11b - 8pcs

11a - 1pcs

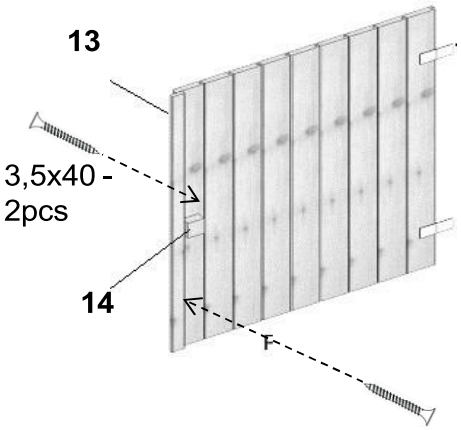

3,5x40 - 2pcs

3,5x25 -

X

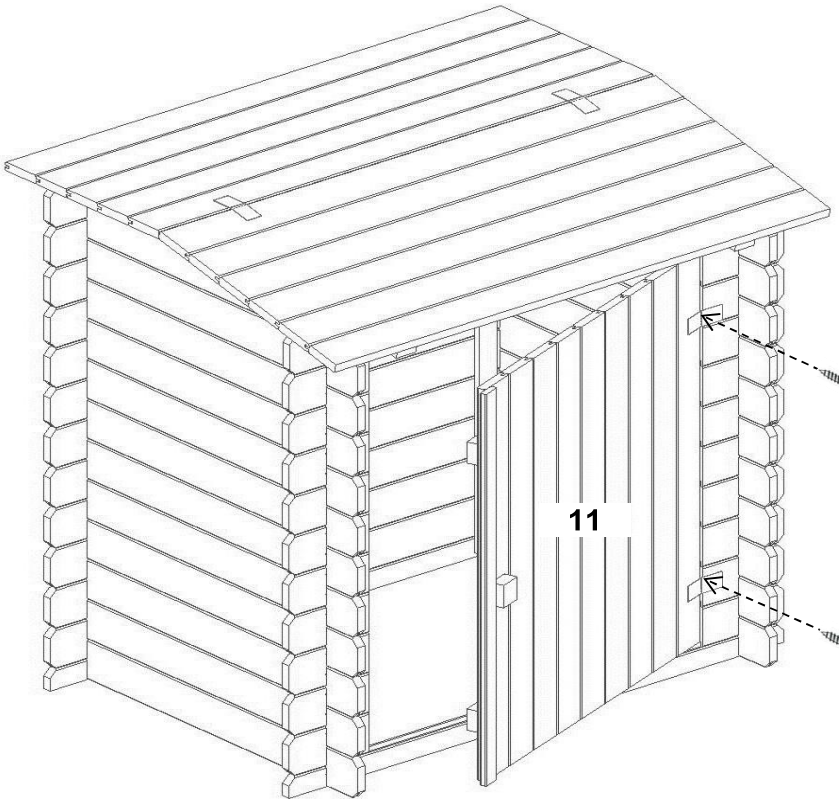

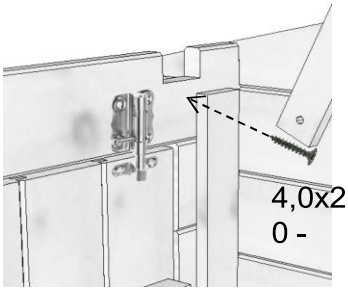

4,0x2 0 -

4,0x20 - 6pcs

4,0x20 - 6pcs

OKU Holzpool EMOTION-FUN Filterhaus 1,20 x 0,89 m Höhe 1,13 m Art. Nr.: 800720

		element	size	pieces
1			1200x99x19	11
2			1200x89x19	1
3			1200x89x19	1
4			1200x99x19	4
5			1200x89x19	1
6		6a 6b 6c 6d	1200x523x46	1x 1x 4x 2x
7			195x99x19	20
8A			890x99x19	2
8B			609x45x19	2
9			890x99x19	22
10			1200x54x19	2
11		**11a** **11b** **11c** **11d**	870x801x46	1x 8x 2x 1x
12			330x45x13	1
13			870x45x13	1
14			50x50x28	1
15			1060x45x13	2
16			970x45x13	2

OKU Holzpool EMOTION-FUN Filterhaus 1,20 x 0,89 m Höhe 1,13 m Art. Nr.: 800720

		30x70	2
		40x40	2
A		4,0x20	30
B	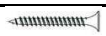	3,5x25	54
C		3,5x40	90
D		6x40	1
E			1